CERTPARK

QUESTION & ANSWER

CERTPARK.COM

Accurate Study Guides,
High Passing Rate!
provides update
free of charge
in one year!

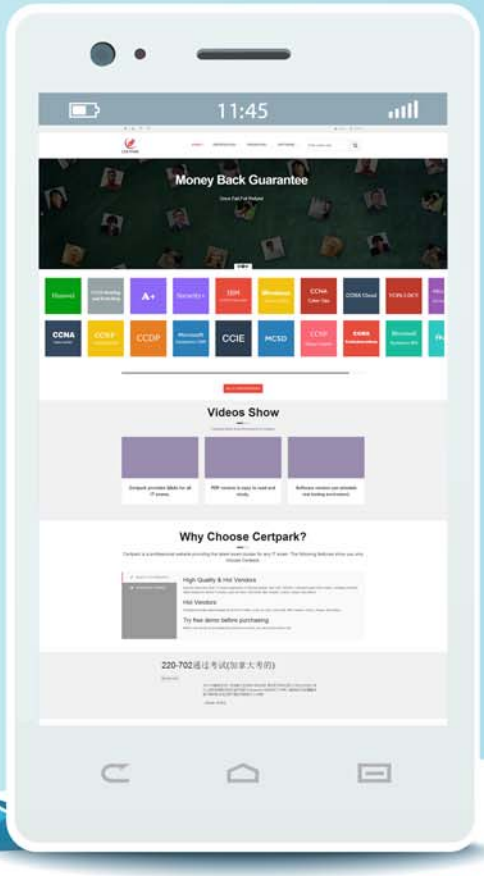

https://www.certpark.com

Exam : 300-630

Title : Implementing Cisco Application Centric Infrastructure - Advanced (DCACIA)

Version : DEMO

1.Refer to the exhibit.

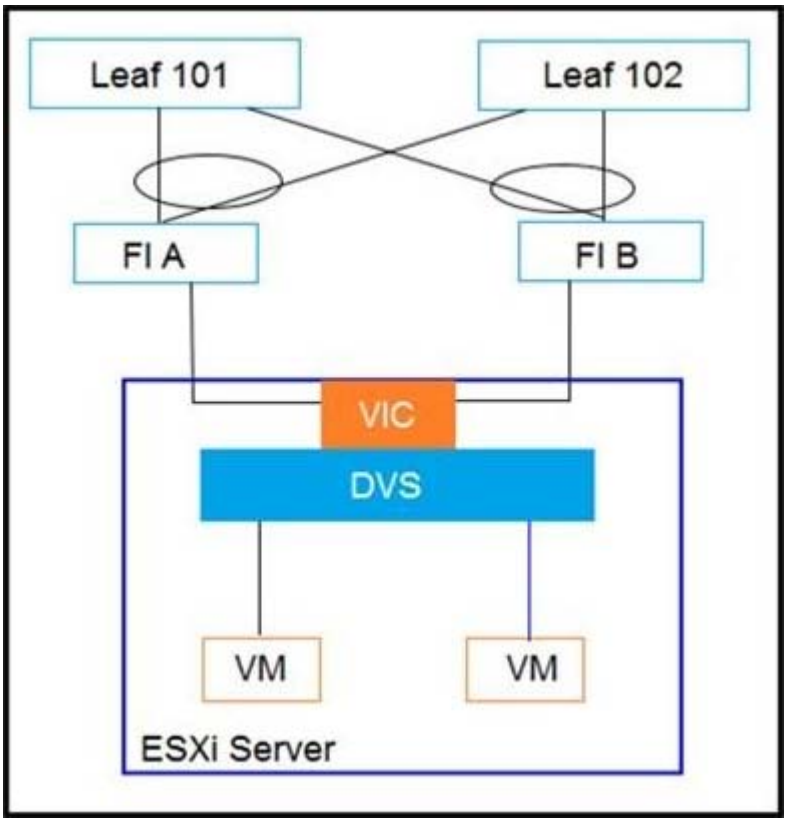

Between Cisco UCS FIs and Cisco ACI leaf switches, CDP is disabled, the LLDP is enabled, and LACP is in Active mode.

Which two discovery protocols and load-balancing mechanism combinations can be implemented for the DVS? (Choose two.)

A. CDP enabled, LLDP disabled, and LACP Active

B. CDP disabled, LLDP enabled, and MAC Pinning

C. CDP enabled, LLDP disabled, and MAC Pinning

D. CDP enabled, LLDP enabled, and LACP Active

E. CDP enabled, LLDP disabled, and LACP Passive

F. CDP disabled, LLDP enabled, and LACP Passive

Answer: B,E

2.Refer to the exhibit.

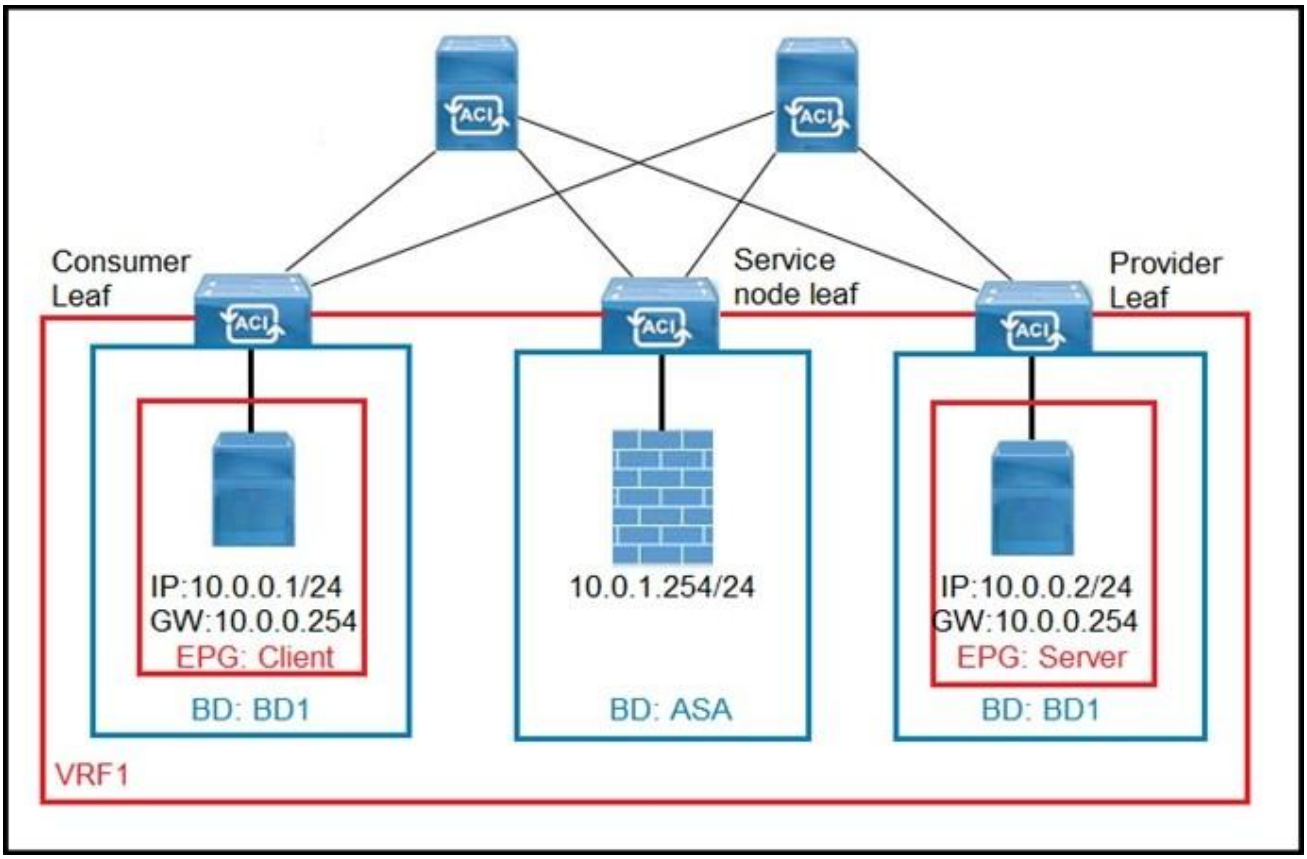

What must be configured in the service graph to redirect HTTP traffic between the EPG client and EPG server to go through the Cisco ASA firewall?

A. contract filter to allow ARP and HTTP

B. precise filter to allow only HTTP traffic

C. contract with no filter

D. permit-all contract filter

Answer: A

3.An engineer configures a new Cisco ACI Multi-Pod and must set up the link between the spine and the IPN device.

Which three actions should be taken to accomplish this goal? (Choose three.)

A. Enable MP-BGP routing

B. Enable BIDIR-PIM protocol

C. Enable PIM-SM protocol

D. Enable OSPF routing

E. Enable IS-IS routing

F. Enable DHCP relay

Answer: A,B,F

4.What are two characteristics of Cisco ACI interaction with MSTP? (Choose two.)

A. A Cisco ACI leaf flushes all local endpoints in the received EPG when an MSTP TCN frame is received.

B. A static path binding is required for native VLAN to carry the MST BPDUs in existing EPGs.

C. Mis-cabling protocol is used to snoop the MSTP TCN packets.

D. A dedicated EPG must be created for the native VLAN ID with static bindings toward the MSTP-enabled switches.
E. The PVST simulation must be configured on external network switches to support MSTP.
Answer: C,D

5.Refer to the exhibit.

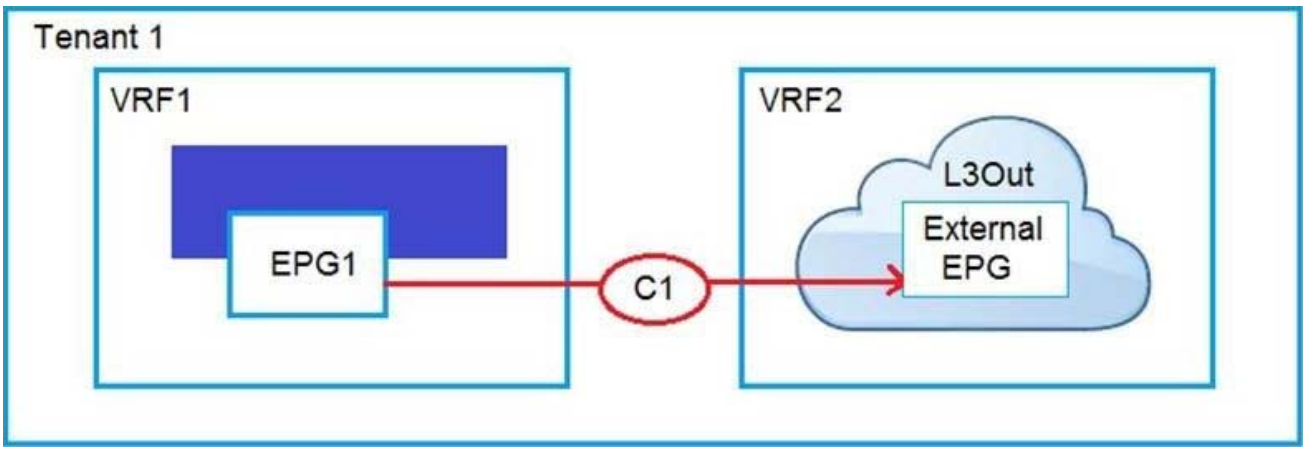

An engineer must have communication between EPG1 in VRF1 and External EPG in VRF2.
Which three actions should be taken for the defined subnets in the L3Out External EPG to accomplish this goal? (Choose three.)
A. Enable Shared Route Control Subnet
B. Enable External Subnets for External EPG
C. Enable Export Route Control Subnet
D. Enable Shared Security Import Subnet
E. Enable Aggregate Shared Routes
F. Enable Import Route Control Subnet
Answer: C,D,F
Explanation:
Reference:
https://www.cisco.com/c/en/us/solutions/collateral/data-center-virtualization/application-centric-infrastructure/guide-c07-743150.html